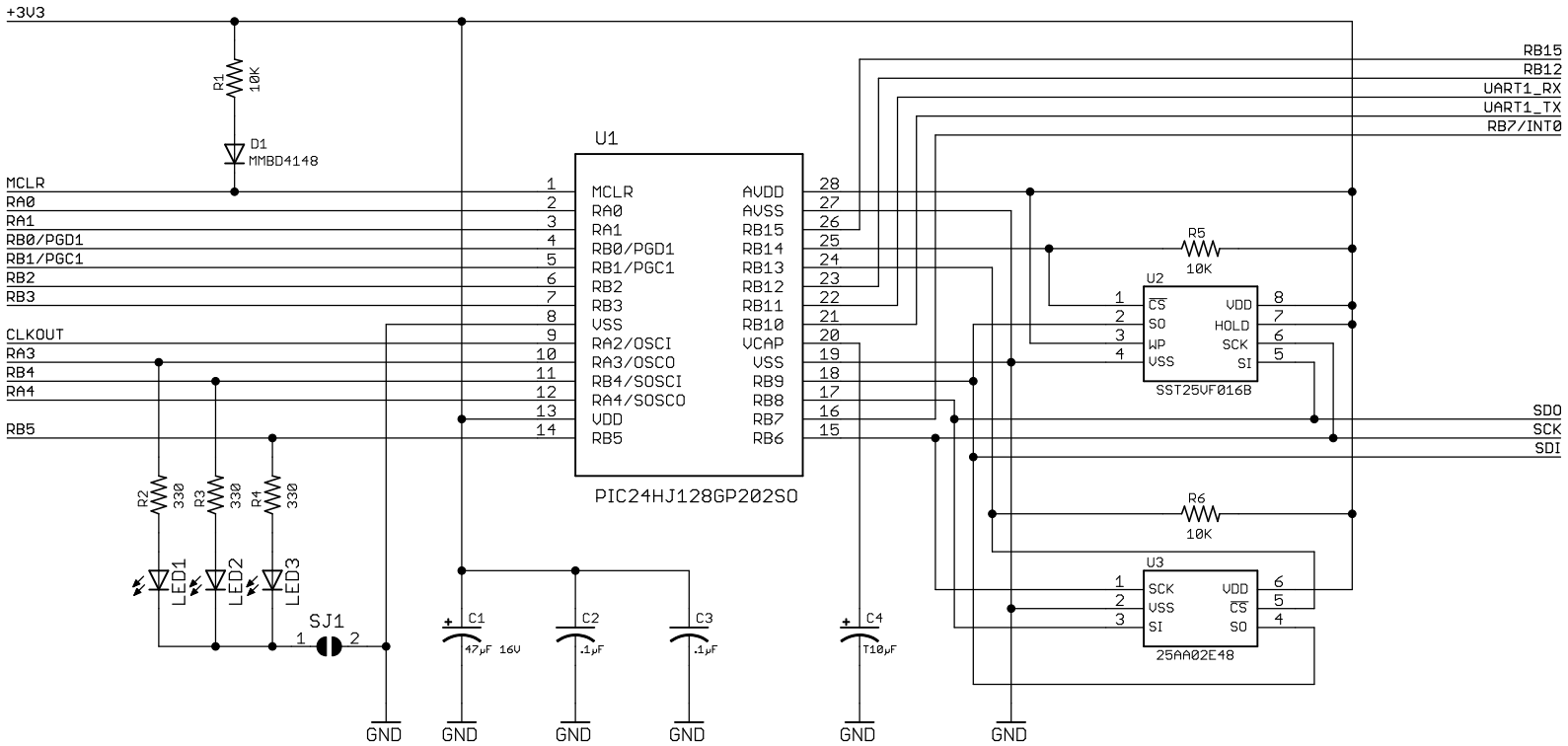

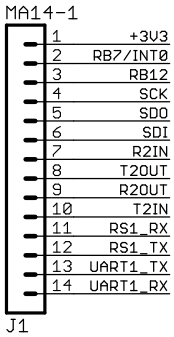

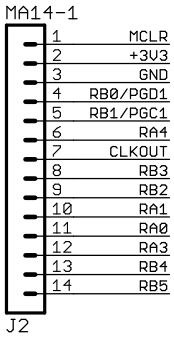

eIP-24 Embedded TCP/IP MCU

TITLE: eIP-24-v1.0

REV: v1.0

© 2009 LJCV Electronics Sept 1, 2009

Sheet: 1/2

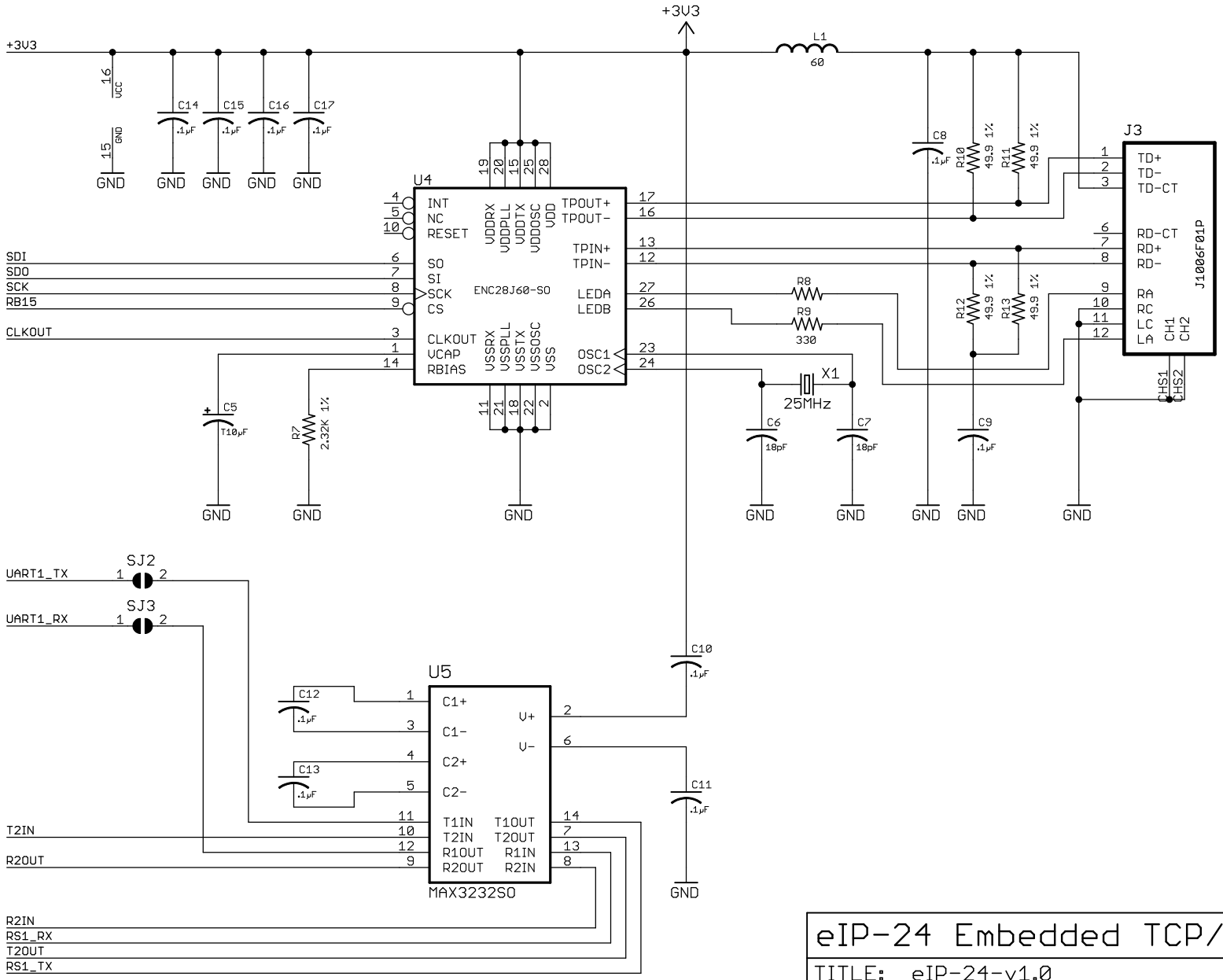

eIP-24 Embedded TCP/IP MCU

TITLE: eIP-24-v1.0

REV: v1.0

© 2009 LJCV Electronics Sept 1, 2009

Sheet: 2/2